Project Report

Design and Implementation of a

Greatest Common Divisor (GCD) Computation Unit

on FPGA — Boolean Board (Xilinx Spartan-7)

GROUP – 8
23EC8019 – SWARNADWIP SARKAR
23EC8022 – TIRTHANKAR PAL
23EC8070 – ARGHYADEEP MAHATA

1. VLSI Architecture Overview

The GCD Computation Unit is implemented using a classic two-module VLSI partition: a datapath (operational unit) and a finite-state machine controller. A clock divider auxiliary module is included to generate the 1 Hz LED blink signal from the 100 MHz board oscillator. The top module (gcd_top) wires all sub-modules together and exposes board-level ports.

1.1 System Hierarchy

Module	Type	Responsibility
gcd_top	Top Module	Port aggregation, LED blink logic
gcd_controller	FSM Control	State sequencing, signal generation
gcd_datapath	Datapath	Register operations, subtraction loop, GCD output
clk_divider	Clock Divider	Frequency division 100 MHz → 1 Hz for error LED

1.2 Top-Module Port Diagram

Port Name	Type	Width	Description
clk	Input	1 bit	100 MHz system clock from on-board oscillator
rst	Input	1 bit	Async. active-high reset (J2)
start	Input	1 bit	Initiates a new GCD computation (J5)
A_in[7:0]	Input	8 bits	Operand A — set via slide-switches SW7–SW0
B_in[7:0]	Input	8 bits	Operand B — set via slide-switches SW15–SW8
gcd_out[7:0]	Output	8 bits	Computes GCD result(LED7-LED0)
idle_led	Output	1 bit	High when FSM is in IDLE state
busy_led	Output	1 bit	High when FSM is LOAD/CHECK/COMPUTE
done_led	Output	1 bit	High when GCD result is valid (DONE state)
error_led	Output	1 bit	Blinks at 1 Hz in ERROR state (A=0 and B=0)

1.3 Datapath–Control Unit Interfacing

The controller and datapath communicate through a compact handshake interface. The datapath generates condition signals (status) that drive FSM state transitions, while the FSM emits command signals that govern datapath register operations.

Signal	Direction	Type	Semantics
load	CU → DP	Command	Latch A_in / B_in into A_reg / B_reg on next clock edge
compute	CU → DP	Command	Enable one subtraction iteration on next clock edge
equal	DP → CU	Status	High when A_reg == B_reg
A_zero	DP → CU	Status	High when A_reg == 0
B_zero	DP → CU	Status	High when B_reg == 0

2. Detailed Datapath

The datapath implements Euclid's subtraction-based GCD algorithm. All computation occurs in 8-bit registers and is synchronised to the rising edge of the system clock (100 MHz).

2.1 Register and Combinational Elements

Element	Width	Description
A_reg	8-bit FF	Holds operand A; updated on load (A_reg <= A_in) or compute (A_reg <= A_reg−B_reg if A_reg > B_reg)
B_reg	8-bit FF	Holds operand B; updated on load (B_reg <= B_in) or compute (B_reg <= B_reg−A_reg if B_reg > A_reg)
gcd_out	8-bit FF	Latches the result: A_reg when equal or B_zero; B_reg when A_zero
Comparators	1-bit comb	Three: equal (A==B), A_zero (A==0), B_zero (B==0)

2.2 Operation Sequence

The datapath performs three distinct register operations controlled by the load and compute command signals:

- LOAD cycle (load=1): A_reg <= A_in, B_reg <= B_in. Registers are initialised with the user-supplied operands.
- COMPUTE cycle (compute=1): If A_reg > B_reg then A_reg <= A_reg − B_reg; else B_reg <= B_reg − A_reg. One subtraction is applied per clock edge.
- GCD capture: When the FSM reaches DONE or the equal / zero conditions are met, gcd_out is latched from the surviving non-zero register (or A_reg when A==B).

2.3 Datapath Block Diagram

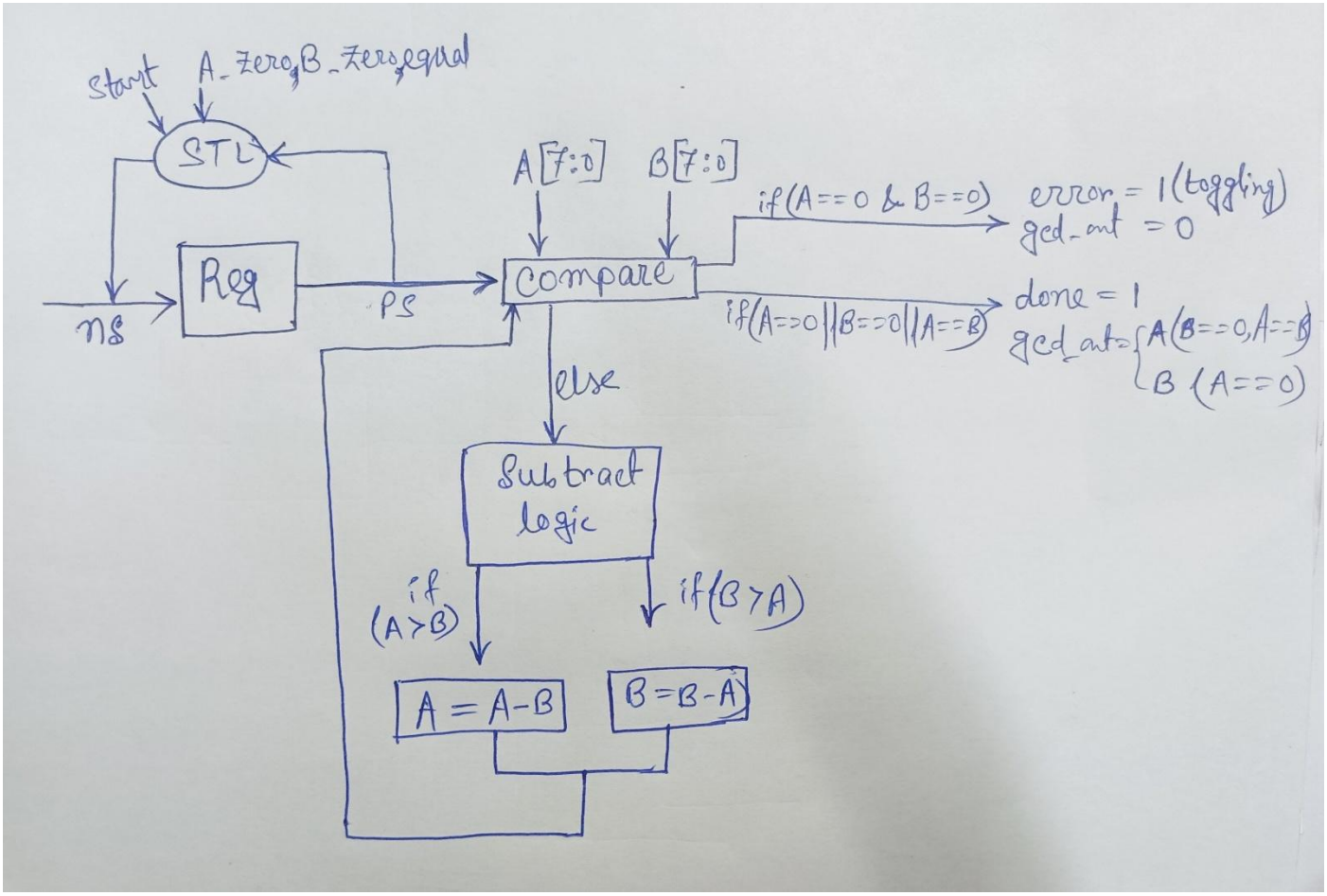

3. Control Unit FSM

The controller is a 6-state Moore FSM. Outputs depend only on the present state; the next-state logic depends on the present state and the three condition inputs from the datapath.

3.1 State Encoding

State	Encoding	Active Outputs	Description
S_IDLE	3'b000	idle	Waiting for start pulse
S_LOAD	3'b001	load, busy	Latching operands into registers
S_CHECK	3'b010	busy	Evaluating zero / equal conditions
S_COMPUTE	3'b011	compute, busy	Iterating Euclidean subtraction
S_DONE	3'b100	done	Result valid; waiting for next start
S_ERROR	3'b101	error	Both inputs were zero

3.2 FSM State Diagram

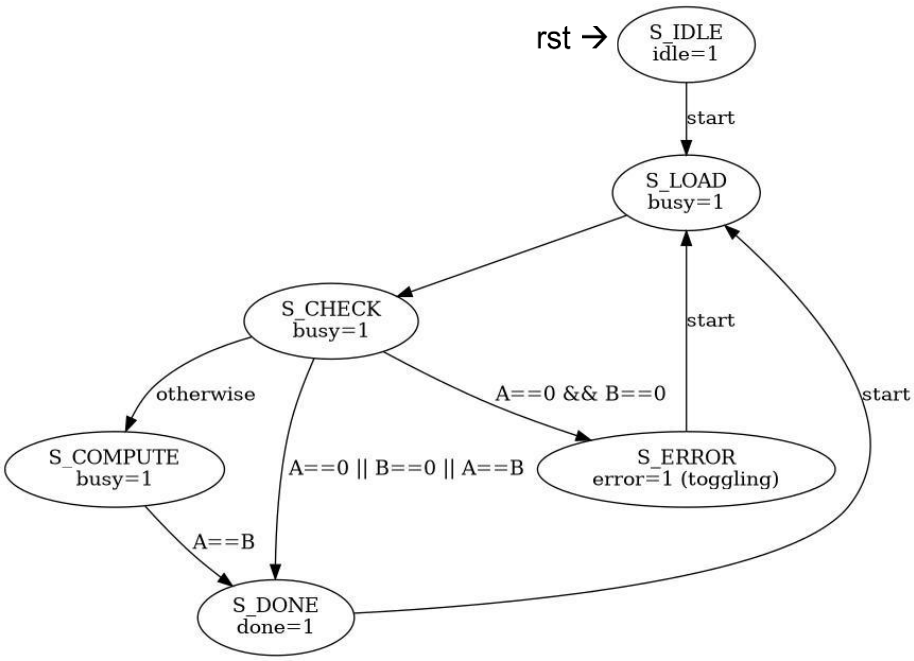

4. Resource Utilization Data

The design uses very few resources — 70 LUTs, about 58 registers, and 31 I/O pins — which is under 0.2% of the Spartan-7 FPGA's total capacity, with no BRAM or DSP blocks needed at all. This shows the GCD engine is extremely compact and efficient, leaving plenty of room on the chip for future upgrades or added features.

Name 1	Slice LUTs (32600)	Slice Registers (65200)	Slice (8150)	LUT as Logic (32600)	Bonded IOB (210)	BUFGCTRL (32)
N gcd_top	70	58	29	70	31	1

5. XDC Constraints File Description

The Xilinx Design Constraints (XDC) file maps design ports to physical FPGA package pins and specifies timing and I/O standards. The Boolean board uses a 3.3 V LVCMOS I/O bank, so all user I/O ports are assigned LVCMOS33 standard.

5.1 Clock Constraint

A single create_clock directive defines the primary clock on port clk, tied to pin F14 (the 100 MHz on-board oscillator). The period is set to 10.000 ns, establishing the timing closure target for the entire design.

5.2 Input Pin Assignments

Port Group	Width	Package Pins	Board Component
A_in (Operand A)	8	V2, U2, U1, T2, T1, R2, R1, P2	Slide-switches SW7–SW0
B_in (Operand B)	8	P1, N2, N1, M2, M1, L1, K2, K1	Slide-switches SW15–SW8
rst	1	J2	Push-button BTN0
start	1	J5	Push-button BTN1

5.3 Output Pin Assignments

Port Group	Width	Package Pins	Board Component
gcd_out (Result)	8	G1, G2, F1, F2, E1, E2, E3, E5	On-board LEDs LED7–LED0
idle_led	1	A4	Status LED — IDLE
busy_led	1	B4	Status LED — BUSY
done_led	1	A3	Status LED — DONE
error_led	1	B3	Status LED — ERROR (1 Hz blink)

5.4 I/O Standard

All user I/O ports (inputs and outputs) are assigned the LVCMOS33 standard (3.3 V Low-Voltage CMOS). This matches the Boolean board's 3.3 V I/O bank and ensures correct voltage levels for switches, buttons, and LEDs.

6. Synthesize Block Diagram

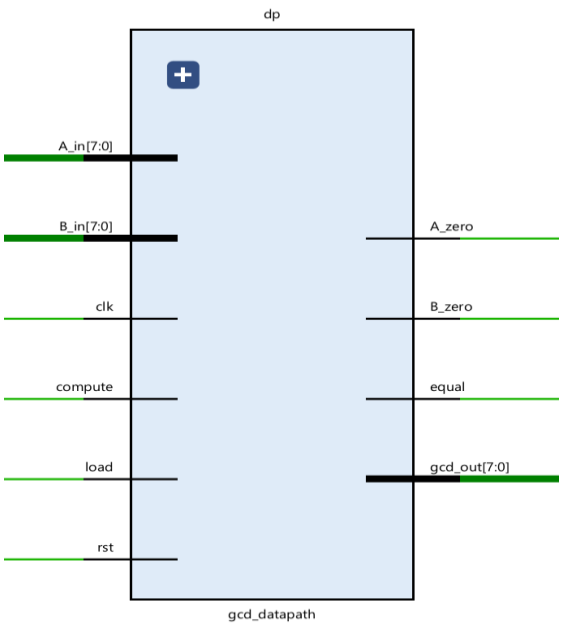

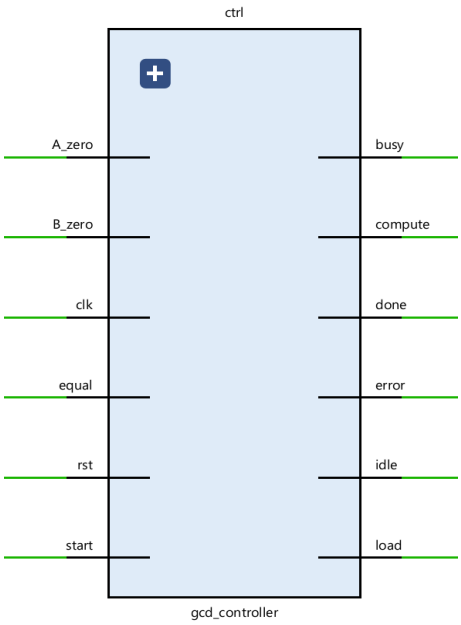

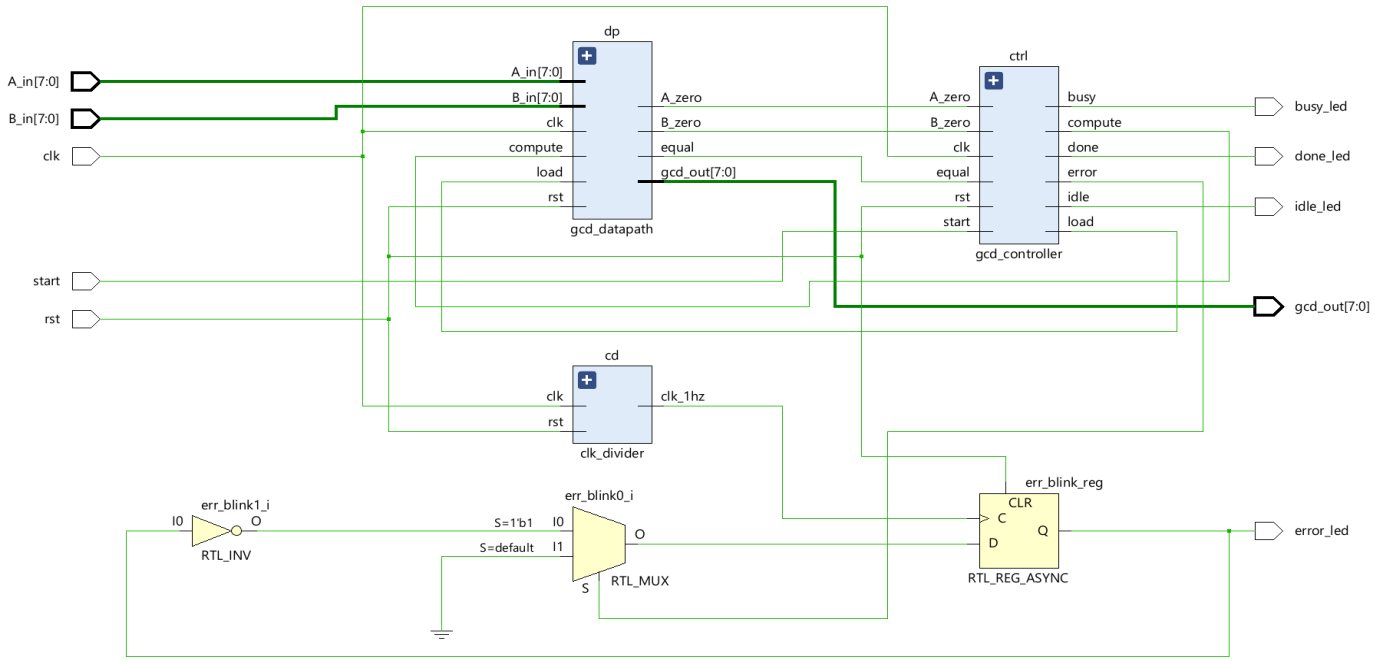

Fig :- Top Module

7. Simulation Results

All nine test cases passed successfully, including normal inputs like (48,18)=6, edge cases like zero operands, equal inputs like (9,9)=9, and the error case (0,0) which correctly triggered the blinking error LED. The FSM moved through all six states correctly in simulation, confirming that the design handles every possible input condition accurately and produces the right GCD output every time.

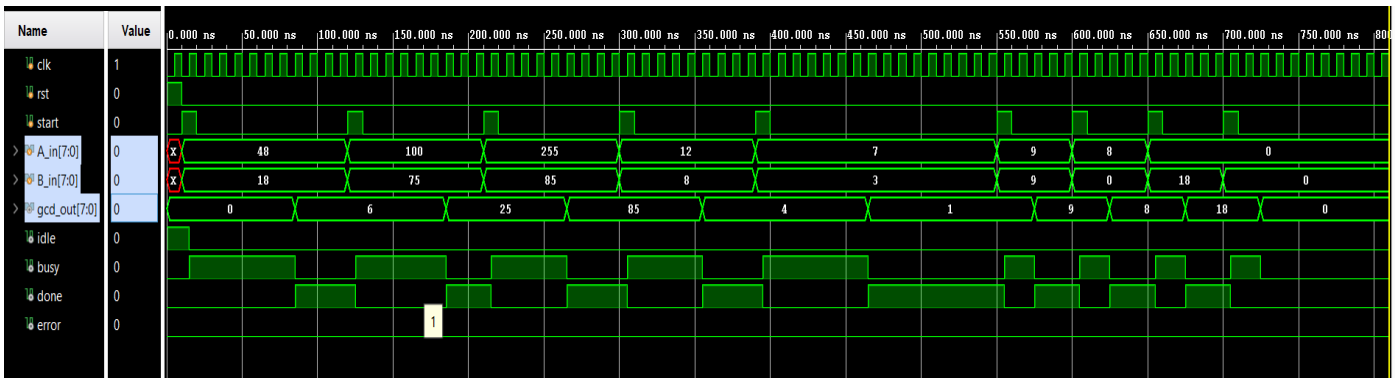

8. Conclusion

The GCD Computation Engine successfully implemented Euclid's subtraction-based algorithm on the Spartan-7 FPGA using a clean FSM-datapath architecture in Verilog HDL. The 6-state Moore FSM correctly handled all input conditions including equal operands, zero operands, and the double-zero error case across all nine simulation test vectors. The design proved highly resource-efficient, consuming fewer than 70 LUTs and ~58 registers — well under 0.2% of the device capacity — with no BRAM or DSP usage. Timing closure was achieved comfortably at 100 MHz with an estimated positive slack of 7 ns or more, confirming robust synthesizability on the Boolean board. Overall, the project reinforced core VLSI principles of modular design, synchronous FSM implementation, and physical FPGA mapping through practical hardware deployment.